BEFARD



MINI CRANE
ON CRAWLER CHASSIS

XM 1600

UNMATCHED POWER, COMPACT DIMENSIONS, FOR MORE EFFICIENT WORK

- maximum lifting capacity 1600 kg – with the support blade
- Pick&Carry – travelling with a suspended load of 1250 kg
- hydraulic JiB – lifting capacity 650 kg
- vertical reach 11.2 m with hydraulic JiB (7.7 m without JiB)
- horizontal reach 8.9 m with hydraulic JiB
- hydraulic winch 990 kg or 500 kg
- column rotation of 50°
- width 780 mm, height 1.75 m
- extendable crawler undercarriage 780–1250 mm
- radio remote control – operation and travel
- power supply: 3in1 / combustion + electric / Li-ion batteries / combustion engine
- SUPER POWER power supply – diesel engine



04/11/2026

UNMATCHED ADVANTAGES



MACHINE REACH

Maximum vertical reach of 11.2 m with hydraulic JiB.
Version without JiB: 7.7 m vertical.



LIFTING CAPACITY

The standard machine's lifting capacity with the support blade is 1600 kg, which is sufficient for most standard applications such as window installation, loading work, warehousing or short-distance transport.



PICK&CARRY

The 1250 kg Pick&Carry function allows the machine to travel with a raised load. Elements can be transported quickly and efficiently without setting them down, which significantly improves work on a construction site or in an industrial plant.



HYDRAULIC JiB 650 KG

Hydraulic JiB lifting capacity – 650 kg.
The Jib can be placed on the machine's work platform.

04/11/2026

WHAT MATTERS MOST
INCLUDED AS STANDARD



FULLY REMOTE-CONTROLLED MACHINE

Radio remote control of both travel and operation makes work easier and ensures greater safety. A charger for the radio remote control is included as standard.



THREE HYDRAULIC EXTENSIONS + HYDRAULIC JiB

3-section integrated hydraulic extension and hydraulic Jib with 1 extension – ensures smooth extension and even load distribution across each section, which increases stability, structural durability and work safety.



EXTENDABLE, NON-MARKING TRACKS

The extendable undercarriage (780–1250 mm) makes the machine more stable. Narrowing the track width allows it to pass through standard doorways.
Non-marking tracks as standard.

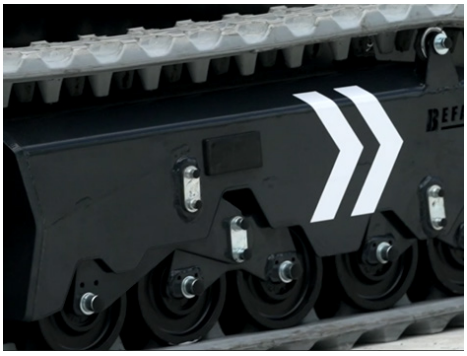

TRACK ROLLERS WITH SUSPENSION

The undercarriage is equipped with 10 shock-absorbing track rollers that adapt to the ground. As a result, the crane maintains high stability and smooth movement even when travelling with a load, minimising the risk of jolts and tilting.

04/11/2026

WHAT MATTERS MOST
INCLUDED AS STANDARD



SUPPORT BLADE

Additional support blade at the front of the machine.
Manually extendable, hydraulically lowered.
Increases the stationary lifting capacity to 1600 kg.
The blade can be fitted with additional options:
• forks
• tow hook



GROUND CLEARANCE

A ground clearance of 13 cm – significantly greater than on the XM800 – increases component protection, the ability to overcome obstacles, working comfort on rough terrain and versatility of use.



HIGH-MOUNTED DRIVE

High-mounted track drive (final drive), which reduces the risk of damage.



LARGE ARM OPENING ANGLE

The 65° arm opening angle allows trouble-free work on a two-storey building.

CHOOSE
OPTIONAL EXTRAS



WINCH TO CHOOSE FROM

Hydraulic winch to choose from:
• 990 kg with 50 m of 7 mm steel rope
• 500 kg with 36 m of 6 mm steel rope
significantly increasing the functionality of the machine.



OPERATOR STANDING PLATFORM

Rear platform for the operator to stand on the machine. It increases the counterweight, which helps when travelling with a load (not required).

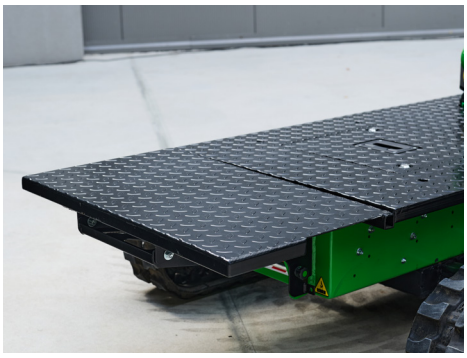

LOADING PLATFORM EXTENSION

Removable loading platform extension of approx. 0.3 m.

ACCESSORIES
INCLUDED AS STANDARD

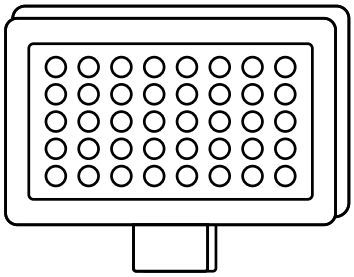

LED WORK LIGHTS

2 pcs.
- fixed lamp
- magnetic lamp

OPTIONAL EXTRAS

SNATCH BLOCK

Winch accessory.

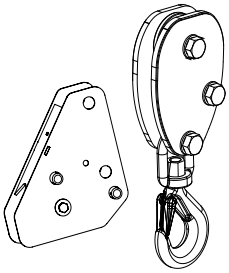

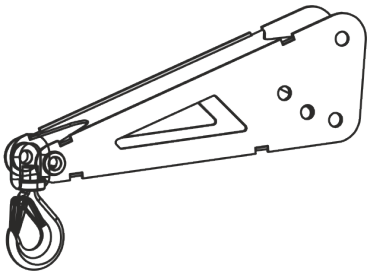

JIB SEARCH HOOK

Extends the reach by approx. 50 cm.

MANUAL JIB ARM

Extends the reach by approx. 100 cm. Two manual JiB arms can be used simultaneously.

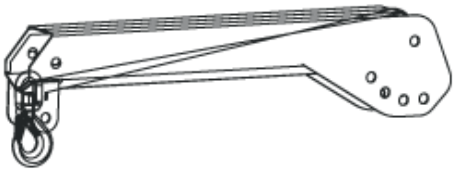

TECHNICAL
SPECIFICATIONS

Maximum pick&carry lifting capacity	1250 kg
Maximum lifting capacity with support blade	1600 kg
Maximum JiB lifting capacity	650 kg
Machine transport length	2.3 m
Machine transport height	1.75 m
Machine transport width	0.78 m
Maximum horizontal reach	6.15 m
Maximum horizontal reach with hydraulic JIB	8.9 m
Maximum vertical reach	7.7 m
Maximum vertical reach with optional equipment	11.2 m
Hydraulic winch lifting capacity	990 kg or 500 kg
Winch rope length (depending on version)	50 m / 36 m
Radio remote control	operation and travel
BASIC machine weight	~1270 kg
Machine weight WITH COUNTERWEIGHTS AND HYDRAULIC JiB	~1580 kg
Power supply options:	3in1 (combustion engine + Li-ion battery + 230 V mains operation) combustion + electric (230 V, 400 V or 110 V) Li-ion batteries combustion engine **SUPER POWER** – diesel engine power supply available. Only in the following configurations: diesel engine only, or diesel engine + 230 V / 400 V electric motor
Rotation	Column rotation 25° to the right and left (50° in total)

04/11/2026

WITH HYDRAULIC JIB

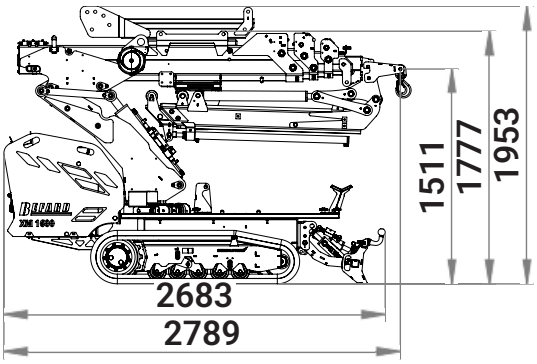

WITHOUT HYDRAULIC JIB

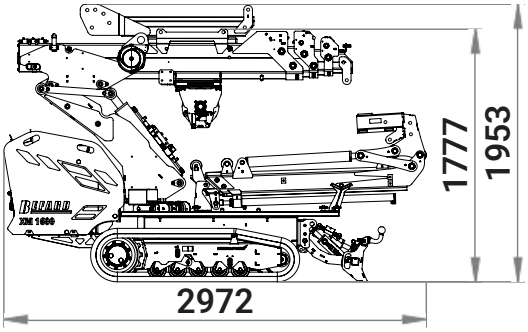

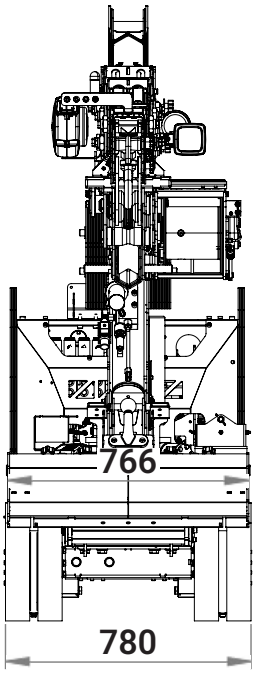

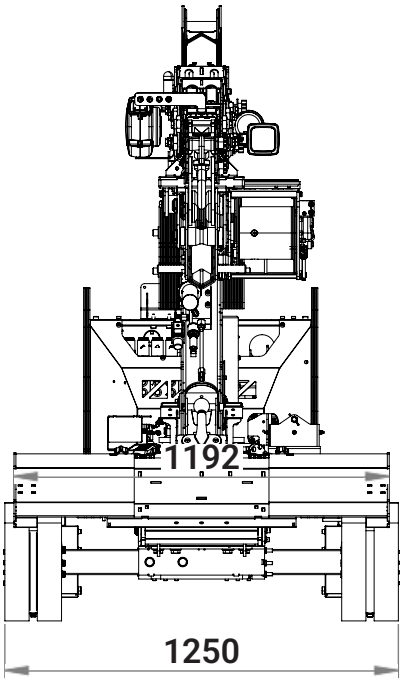

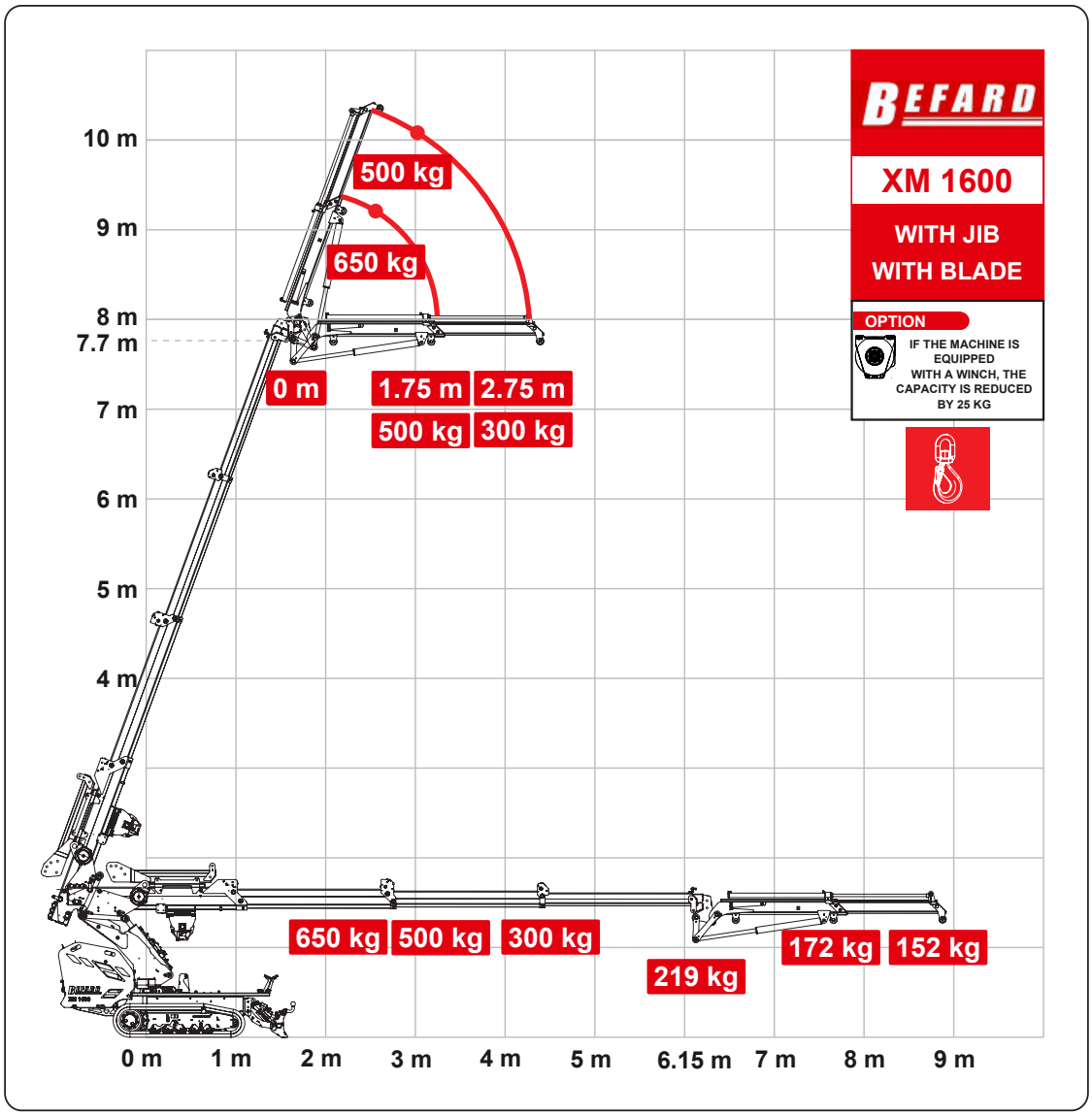
BEFARD
XM 1600
WITH JIB
WITH BLADE
OPTION
IF THE MACHINE IS EQUIPPED WITH A WINCH, THE CAPACITY IS REDUCED BY 25 KG
10 m
9 m
8 m
7.7 m
7 m
6 m
5 m
4 m
500 kg
650 kg
0 m
1.75 m
2.75 m
500 kg
300 kg
650 kg
500 kg
300 kg
219 kg
172 kg
152 kg
0 m
1 m
2 m
3 m
4 m
5 m
6.15 m
7 m
8 m
9 m

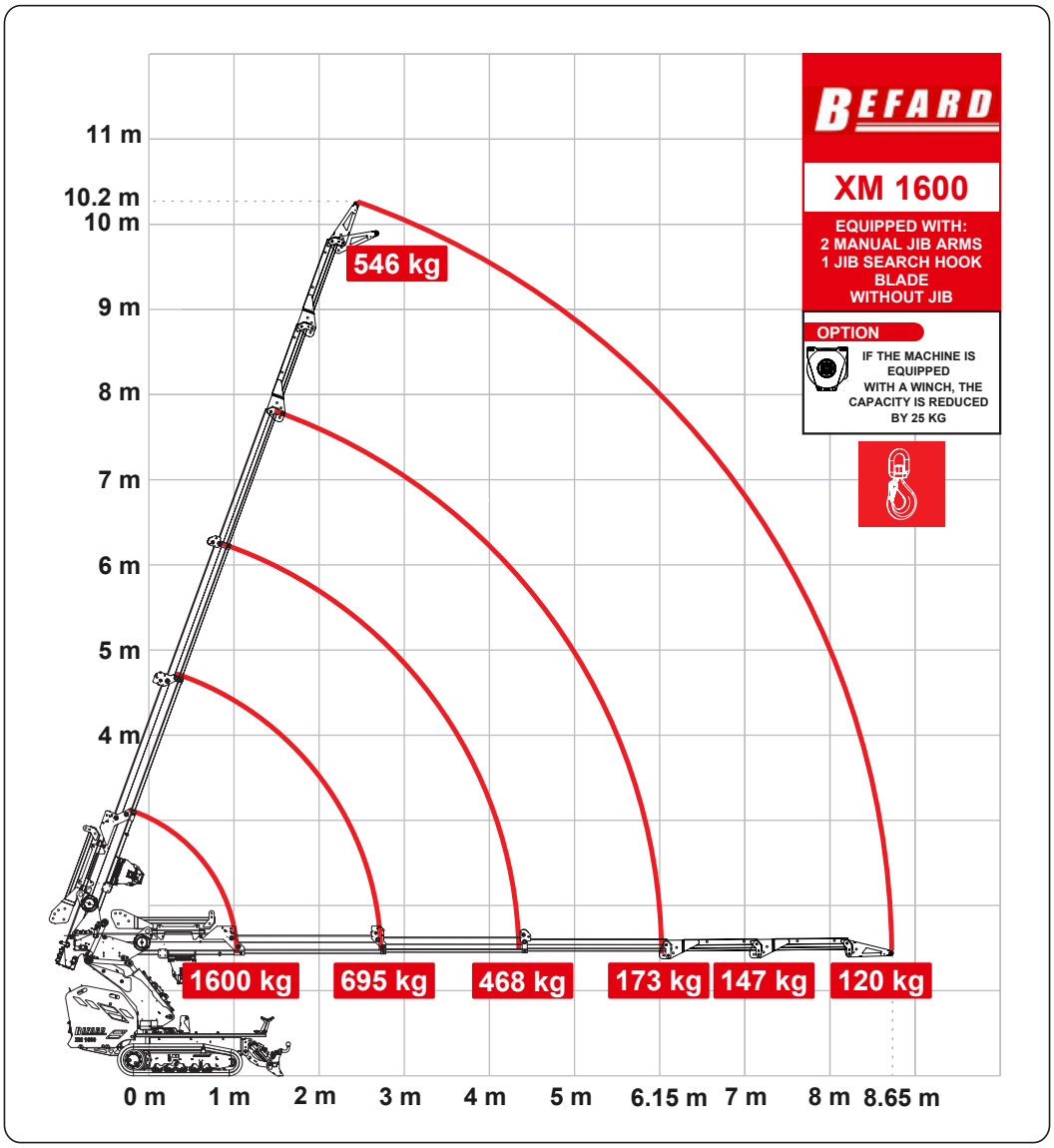
BEFARD
XM 1600
EQUIPPED WITH:
2 MANUAL JIB ARMS
1 JIB SEARCH HOOK
BLADE
WITHOUT JIB
OPTION
IF THE MACHINE IS EQUIPPED WITH A WINCH, THE CAPACITY IS REDUCED BY 25 KG
11 m
10.2 m
10 m
9 m
8 m
7 m
6 m
5 m
4 m
546 kg
1600 kg
695 kg
468 kg
173 kg
147 kg
120 kg
0 m
1 m
2 m
3 m
4 m
5 m
6.15 m
7 m
8 m
8.65 m

XM 1600 with 990 kg winch

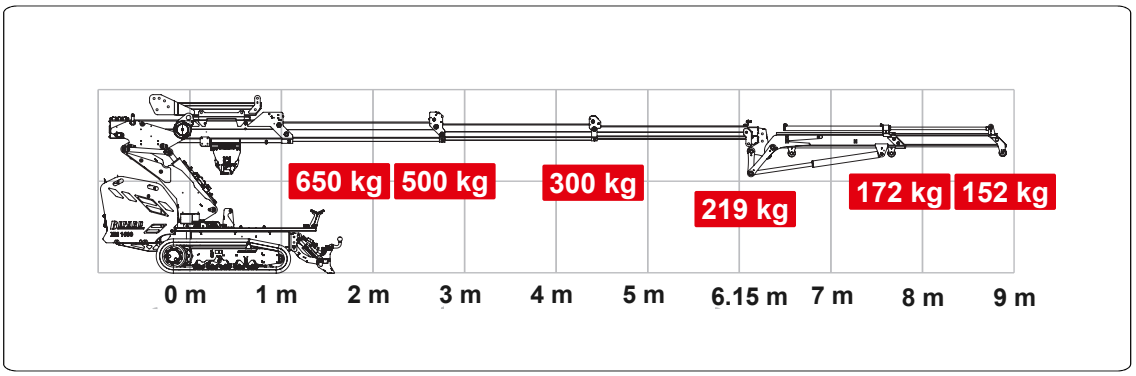

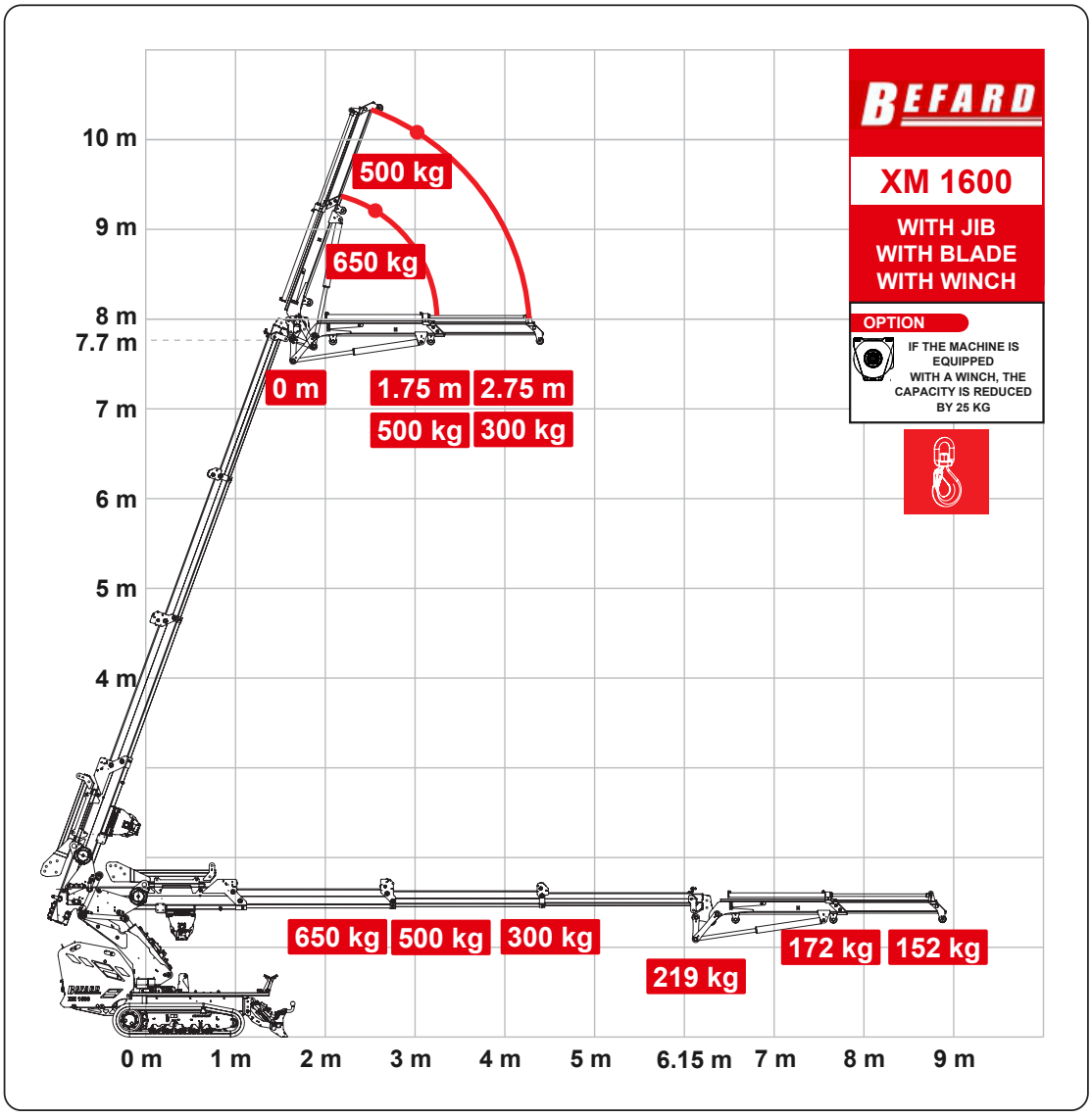

04/11/2026

XM 1600 with 500 kg winch

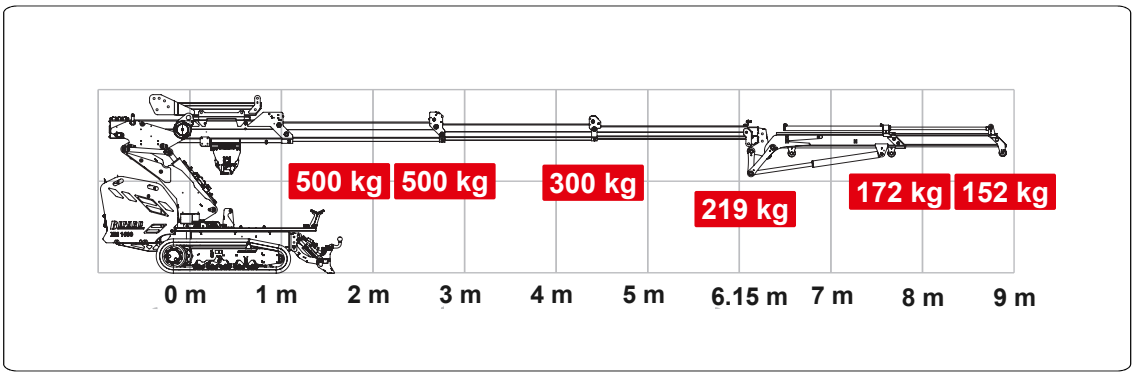

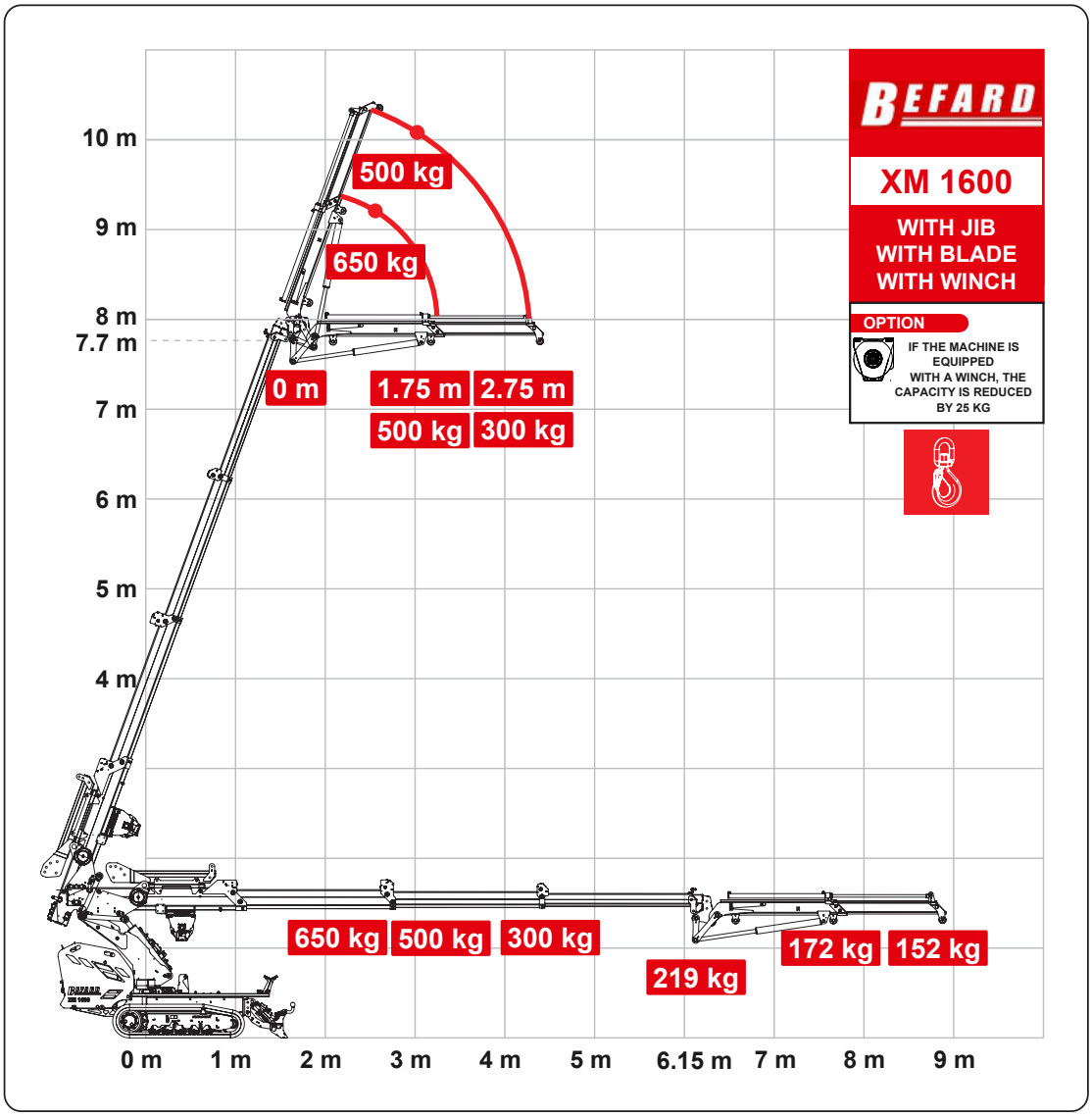

04/11/2026

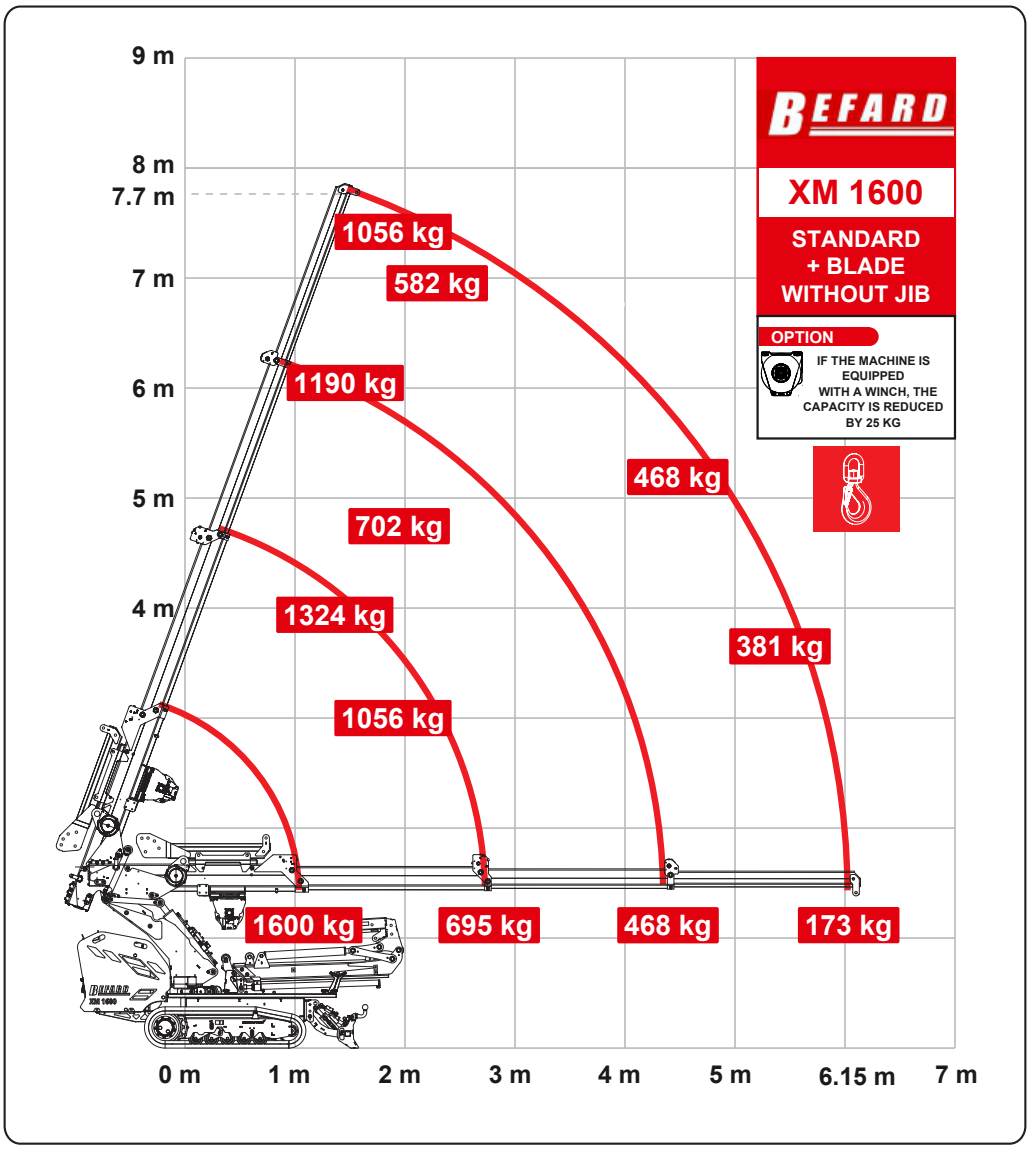
9 m
8 m
7.7 m
7 m
6 m
5 m
4 m
1056 kg
582 kg
1190 kg
468 kg
702 kg
1324 kg
381 kg
1056 kg
1600 kg
695 kg
468 kg
173 kg
0 m
1 m
2 m
3 m
4 m
5 m
6.15 m
7 m
BEFARD
XM 1600
STANDARD
+ BLADE
WITHOUT JIB
OPTION
IF THE MACHINE IS EQUIPPED WITH A WINCH, THE CAPACITY IS REDUCED BY 25 KG

BEFARD XM 1600













BEFARD

BEFARD.COM