BEFARD

TRACKED GLASS
ASSEMBLY ROBOT

XGR800

Precision, mobility, safety

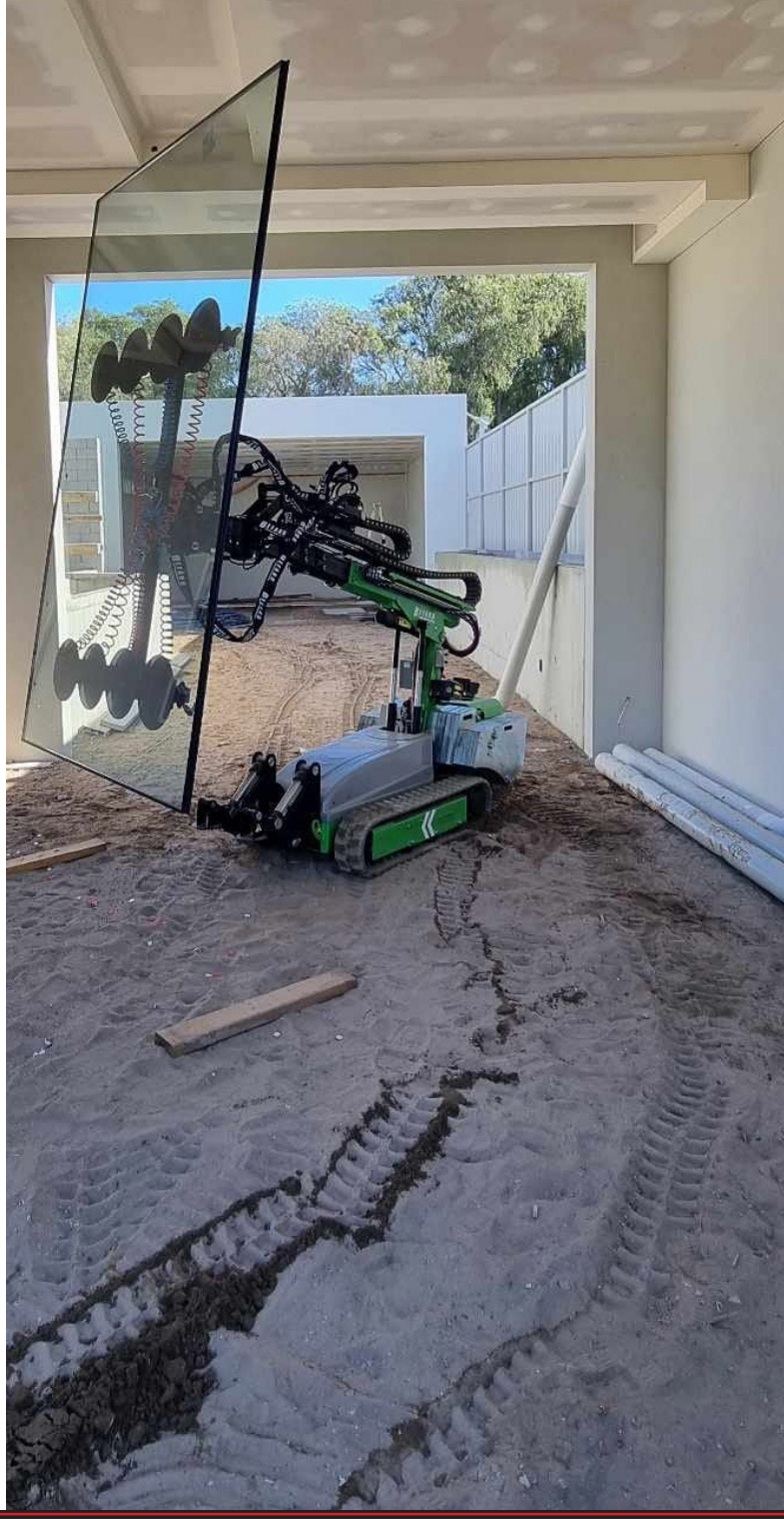

CAPACITY	REACH	REACH	REACH	WIDTH
800 kg	**3.95** m	**4.75** m	**5.55** m	**93** cm
8 suction cups	**XGR800.1**	**XGR800.2**	**XGR800.3**	height **160 cm**

The **BEFARD XGR800** tracked assembly robot is designed for installing heavy glass panes and windows. The tracked undercarriage ensures stability and mobility on the construction site, the hydraulic head – precise positioning, and the compact dimensions – easy manoeuvring in tight spaces. Maximum lifting capacity **800 kg**. Versions **XGR800.1 / .2 / .3** – 1, 2 or 3 hydraulic extensions.

Advantages and standard equipment

1



Radio remote control STANDARD

Operation and driving with one remote control. Remote control charger included as standard.

2



Tracked undercarriage STANDARD

Non-marking tracks. Two modes: Turtle – precise and Hare – fast.

3



Hydraulic extensions STANDARD

1, 2 or 3 extensions – total reach 3.95 / 4.75 / 5.55 m (XGR800.1 / .2 / .3).

4

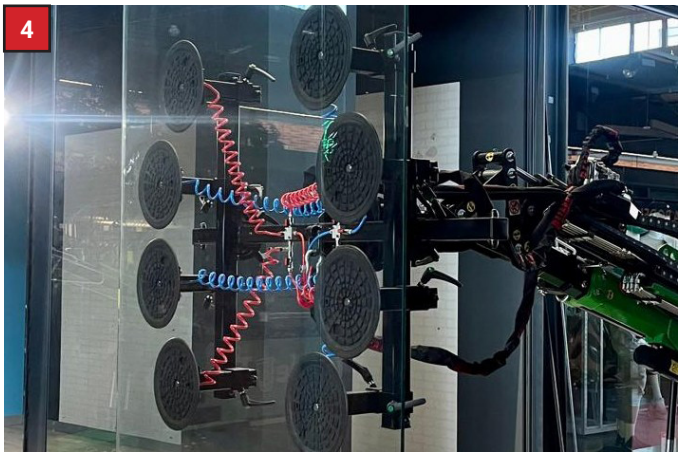

8 suction cups STANDARD

A frame with eight suction cups securely holds heavy glass panes and windows – capacity up to 800 kg.

5



Dual-circuit vacuum STANDARD

Two independent vacuum circuits increase safety when handling glass.

6

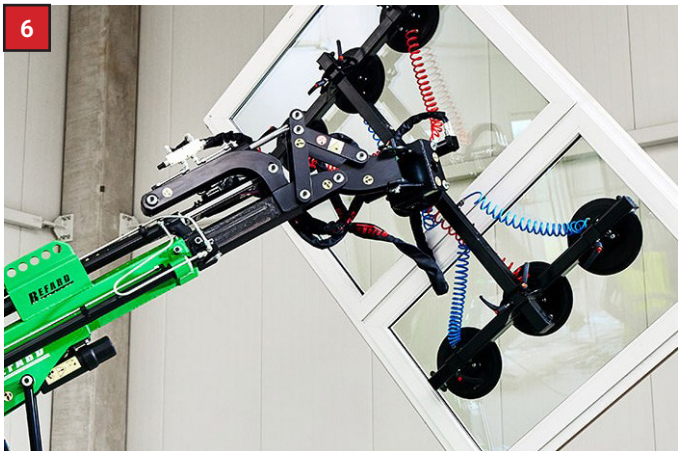

Hydraulic head STANDARD

Frame rotation, lateral shift ±10 cm, lifting from horizontal and tilting to vertical. Manual side tilt.

7



Combustion engine as standard STANDARD

Powered by a combustion engine as standard. Optionally mains power or Li-ion batteries.

Optional equipment

1

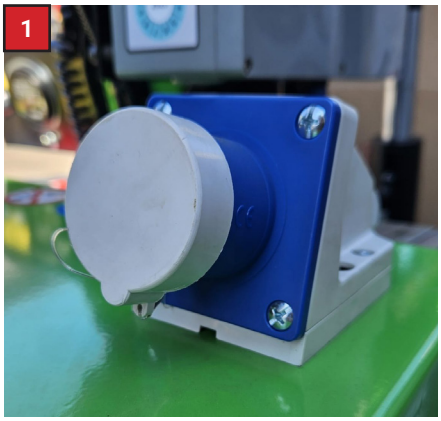

Mains power supply OPTION

For the combustion version: operation on a 230 V cable (optionally 110 V or 400 V).

2



HS spacers OPTION

Adjustable distance of the suction cups from the frame – matched to the thickness and shape of the elements.

3



Hook on the frame OPTION

Lifting loads without using the suction cups.

4



Overload protection system OPTION

Detects excessive load and limits the machine functions.

5

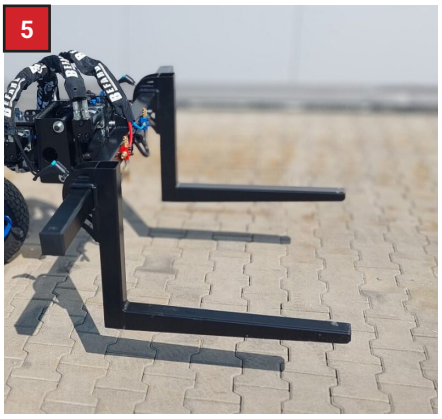

Forks OPTION

Mounted on the same frame after removing the suction cups – for pallets and other loads.

6



Shut-off valves OPTION

A valve at each suction cup – the cups work independently, so the layout can be matched to the load.

7



Magnetic LED light OPTION

Illuminates the work area in poor visibility.

8



RAL colour and ramps OPTION

Painting in a RAL colour of your choice. Aluminium ramps.

9

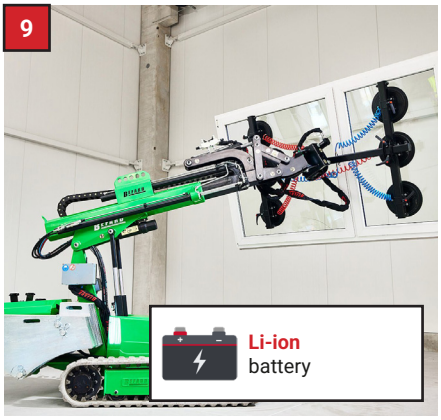

Li-ion battery power OPTION

Built-in 230 V charger, operation on cable while charging. Quiet operation, also in Low Emission Zones.

Technical specifications

CAPACITY	REACH	REACH	REACH	WIDTH
800 kg	**3.95** m	**4.75** m	**5.55** m	**93** cm
8 suction cups	**XGR800.1**	**XGR800.2**	**XGR800.3**	height **160 cm**

1 LIFTING CAPACITY AND REACH

Maximum lifting capacity	**800 kg** · 8 suction cups
Hydraulic extensions	**1 / 2 / 3** · XGR800.1 / .2 / .3
Total reach of extensions	**3.95 / 4.75 / 5.55 m**
Shut-off valves	**at each suction cup** OPTION

2 DIMENSIONS AND TRANSPORT

Transport length	**2.8 m**
Transport height	**1.6 m**
Width	**0.93 m**
Machine weight	**1250 / 1350 / 1450 kg** XGR800.1 / .2 / .3

3 UNDERCARRIAGE AND CONTROL

Tracks	**non-marking**
Working modes	**Turtle / Hare**
Radio remote control	**operation and driving**
Head	**rotation, shift ±10 cm, tilting to vertical – hydraulic**
Overload protection system	**yes** OPTION

4 POWER SUPPLY

Choice of	**combustion, combustion-electric (230 V, 400 V or 110 V) or Li-ion**
Mains power supply	**for the combustion version: 230 V** OPTION optionally 110 V or 400 V
Li-ion batteries	**built-in 230 V charger, operation on cable while charging** OPTION

5 OTHER OPTIONS

HS spacers · overload protection system · forks · hook on the frame · shut-off valves · LED light · ramps · RAL colour · biodegradable oil

6 TRANSPORT DIMENSIONS [MM]

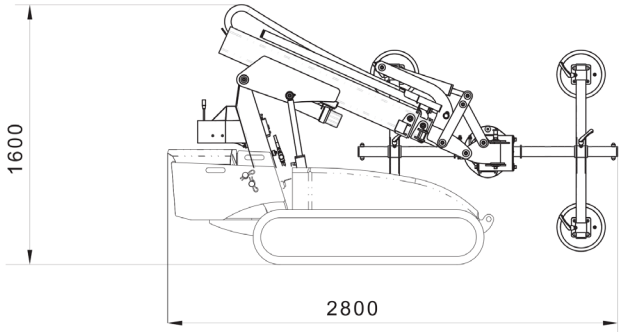

Transport position – side
2800 × 1600

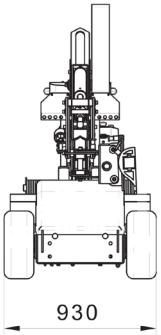

Transport position – front
930

Load charts

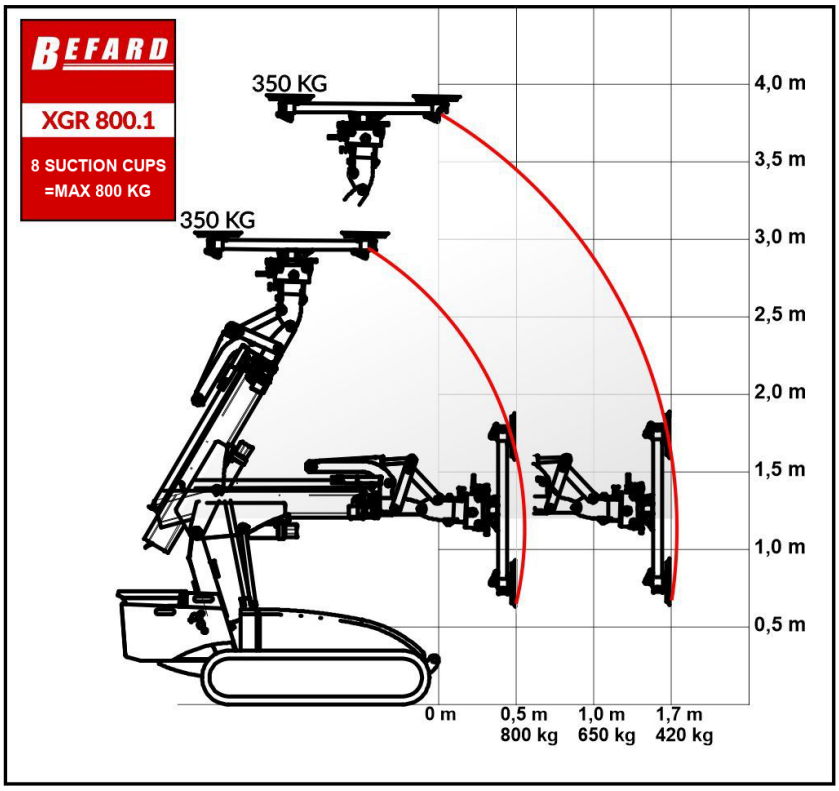

1 XGR800.1 – 1 EXTENSION

0.50 m	**800 kg**
1.00 m	**650 kg**
1.70 m	**420 kg**
Vertical	**350 kg**

Charts for 8 suction cups (max. 800 kg). Selecting the machine for a task requires checking the full load chart.

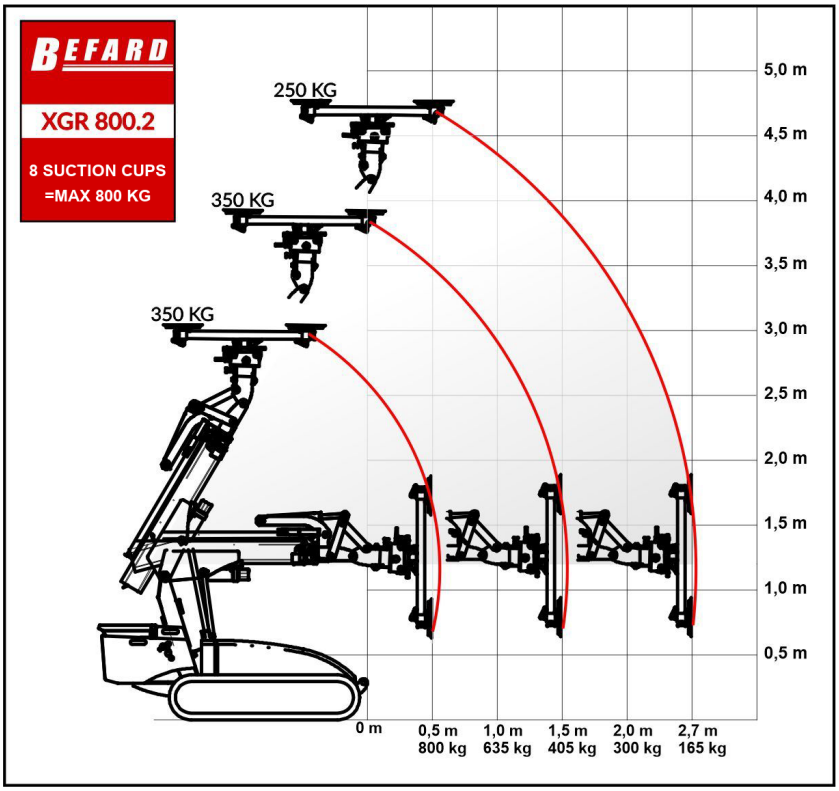

2 XGR800.2 – 2 EXTENSIONS

0.50 m	**800 kg**
1.00 m	**635 kg**
1.50 m	**405 kg**
2.00 m	**300 kg**
2.70 m	**165 kg**
Vertical	**350–250 kg**

Charts for 8 suction cups (max. 800 kg). Selecting the machine for a task requires checking the full load chart.

Load chart XGR800.3

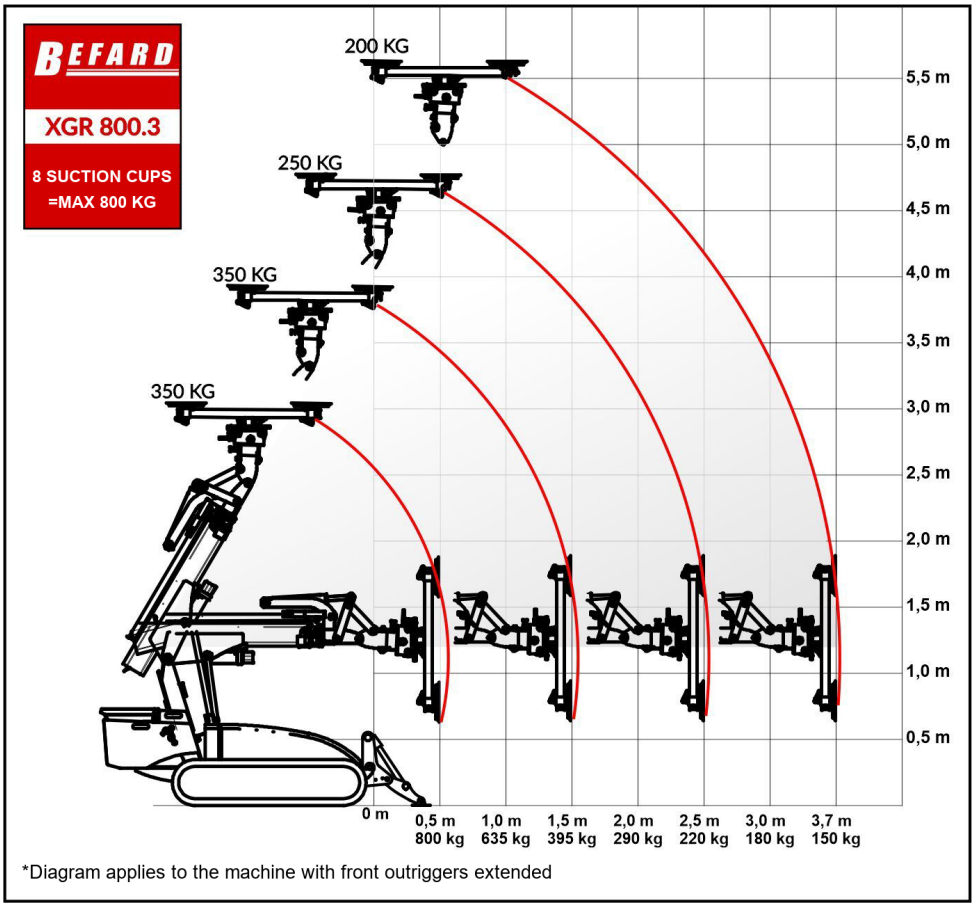

*Diagram applies to the machine with front outriggers extended

3 EXTENSIONS

0.50 m	**800 kg**
1.00 m	**635 kg**
1.50 m	**395 kg**
2.00 m	**290 kg**
2.50 m	**220 kg**
3.00 m	**180 kg**
3.70 m	**150 kg**
Vertical	**350–200 kg**

Chart for 8 suction cups (max. 800 kg) with the front outriggers extended.



Radio remote control – operator next to the load



Window installation – work at the facade







BEFARD

TRACKED ASSEMBLY ROBOT

XGR800.1 / .2 / .3

Befard Sp. z o.o.
Pod Grapą 4, 43-340 Kozy, Poland
+48 33 821 96 92
contact@befard.com
befard.com